SECTION 6

ANCHORING AND GUYING

Anchors & Guying – General Discussion

Anchors and guys are a crucial part of line design. Therefore, we must ensure that the anchors and guying are adequate for the design tensions involved.

All guys will be of 3/8" aluminum clad steel strand or 3/8" stainless steel strand (to be used near coastal areas) with a respective RTS (Rated Tensile Strength) of 15,930 and 16,200 lbs. Previously, guys were aluminized steel strand with a RTS of 10,800 lbs.

Guys are to be terminated preferably on a guy hook but can be terminated on a thimble eye or a guy roller to maintain the required bending radius for the guy grip loop; when it is necessary to terminate on an eye bolt or other eye type fixtures, a GUY THIMBLE must be used (LIN-902-00001 or 902-00002).

Anchors will primarily be of three types:

- **Stub Anchor** (with concrete): this anchor can normally withstand guy tensions of 15,000 to 25,000 lbs.
- **Expanding Shell rock Anchor:** this anchor (either 30" or 7') when installed in hard rock can accommodate guy tensions of up to 15,000 lbs.
- **Power Installed Screw Anchor:** there are two types now in use, the 10" helix and the swamp anchor. When installed properly they should be capable of accommodating tensions up to 15,000 lbs.

Further installation information on anchors is detailed on pages 6-12 and 6-13.

Guy Strain Insulator Rods

Guy strain insulator rods should be used in all locations where it is possible for the guy to become energized.

Guy strain insulators are not necessarily designed or rated for sustained voltage, but rather as occasional energization for a short period of time. Therefore we should not install these insulators where they will be continuously or permanently energized.

The standard guy strain insulator rods are rated at 21,000 lbs and are 24 and 54 inches in length with a clevis on one end and a thimble eye on the other. The basic unit is the 54" rod with a thimble eye for the guy grip: this can be extended with one or more rods as required.

When extending guys from structure to structure, between energized lines, one guy strain insulator rod should be used at each end to ensure isolation of the guy.

Guying – Calculating Design Tensions

Guying requirements are determined from the conductor size, the number of conductors, the line angle and the structure type.

The DESIGN LOAD for all angle structures include the resultant horizontal tensions, calculated from the conductor tensions and the line angle, plus the wind load on the conductors; the values used are tabulated on page 6-3.

For all structure types, the guying requirements and the minimum guy leads are as shown on pages 6-9 to 6-11.

457 NORTH SOUND RD.
P.O. BOX 38 G.T.,GRAND CAYMAN,
CAYMAN ISLANDS, B.W.I.
TELEPHONE: (345)-945-5300/5200

Design Tensions and Conductor Loading

The following values for conductor loading have been calculated for a ruling span of 200 feet; it has been determined that the majority of our distribution lines have a ruling span of 200 feet or less.

Design Tensions & Conductor Loading (AS A RESULT OF HURRICANE WIND CONDITIONS) PER CONDUCTOR									
LINE ANGLE (Degrees)	Resultant Tension Due to Angle (lbs)			Wind Load on Conductor			Combined Load (lbs)		
	2/0	4/0	477	2/0	4/0	477	2/0	4/0	477
5	108	152	259	206	260	394	314	412	653
10	216	304	518	205	259	393	421	563	911
15	324	455	776	204	258	391	528	713	1167
20	431	605	1032	203	256	388	634	861	1420
25	537	754	1286	201	254	385	738	1008	1671
30	642	902	1538	199	251	381	841	1153	1919
35	746	1048	1787	197	248	376	943	1296	2163
40	848	1192	2032	194	244	370	1042	1436	2402
45	949	1333	2274	190	240	364	1139	1573	2638
50	1048	1472	2511	187	236	357	1235	1708	2868
55	1145	1609	2744	183	230	350	1328	1839	3094
60	1240	1742	2971	178	225	341	1418	1967	3312

The above values can be used to determine guying tensions; for a three phase structure with 477 AAC conductor, a 4/0 AAC neutral, and a line angle of 20° the total load becomes (3 x 1420) + (861) = 5121 lbs. The guy lead for a single guy with a 40-foot pole, calculated from the formulae on page 6-5/6, is 33 feet.

These values can be used for Ruling Spans up to 225’ with negligible error. These values together with the formulae on page 6-5/6 are used to determine the minimum guy lead; the guy lead should normally be at 30° to 45° with the pole, with 45° being the optimum (at 45° the guy lead is equal to the attachment height).

Guying – Angle Structures with Taps

When constructing lines the main line is normally built first, and taps off the main line are constructed later. When the main line structure is an angle structure, it will be guyed; when the tap is connected to this structure it will normally be guyed as well.

When the direction of the tap is the same as the main line structure guy it is sometimes assumed that this guy is no longer required; this, however, will depend on the line angle and the conductor size. To ensure that we do not over tension the tap conductor by removing a guy, the tension due to the line angle and the tension of the tap conductor(s) must be calculated.

The resultant tensions at an angle structure, due to the conductor tension, can be calculated using the chart on page 6-3 (full conductor tension is equal to the resultant conductor tension for a 60° line angle).

For example: - Assuming a line angle of 15° and a three phase line with 4/0 AAC conductor; the resultant tension due to the primary conductor tension is 3 x 455 lbs = 1365 lbs.

If we install a single phase tap using 2/0 AAC conductor, the full design tension for 2/0 AAC is 1240lbs; therefore the guy can be removed if required, since the two tensions are almost equal.

Also if the tap conductor is two or three phases a guy will be required to hold against the tap.

Occasionally a guy can be removed or is not required, if the calculated tensions are equal; however these guys will normally be required.

457 NORTH SOUND RD.
P.O. BOX 38 G.T.,GRAND CAYMAN,
CAYMAN ISLANDS, B.W.I.
TELEPHONE: (345)-945-5300/5200

Calculating Minimum Guy Lead Distance

The minimum guy lead distance can be determined using the following calculation:

$$\boldsymbol{Min\ Guy\ Lead = TAN\left[SIN^{-1}\left(\frac{Resultant\ Tension}{Guy\ Rating}\right)\right] \times Guy\ Attachment\ Height}$$

Where: **Min Guy Lead** is in feet
Guy Attachment is in feet
Resultant Tension is in pounds (as determined from the formulae below)
Guy Rating is in pounds (7200 lbs. as determined below)

The Guy Rating or Allowable Tension under maximum loading conditions (hurricane wind at 30 psf) has been calculated at 7,200 lbs. using the rating of the aluminized steel strand in use on existing structures.

$$Guy\ Rating = \frac{Rated\ Guy\ Wire\ Strength}{Safety\ Factor} = \frac{10{,}800}{1.5} = 7{,}200\ lbs$$

The maximum conductor tension, under hurricane wind conditions of 30 psf, using a ruling span of 200 ft. is 2971 lbs. for 477 AAC, 1742 lbs. for 4/0 AAC and 1240 lbs. for 2/0 AAC. For ruling spans greater than 200 ft. the actual tensions shall be used (i.e. 3296 lbs. for 477 AAC with a 250 ft. ruling span).

The RESULTANT TENSION (TR) due to the MAXIMUM CONDUCTOR TENSION (Tmax) at any line angle can be calculated:

$$\boldsymbol{Resultant\ Tension = Max\ Cond\ Tension \times \frac{\sin\theta}{\sin\left(90^\circ - \theta/2\right)}}$$

Where: θ = line angle in degrees

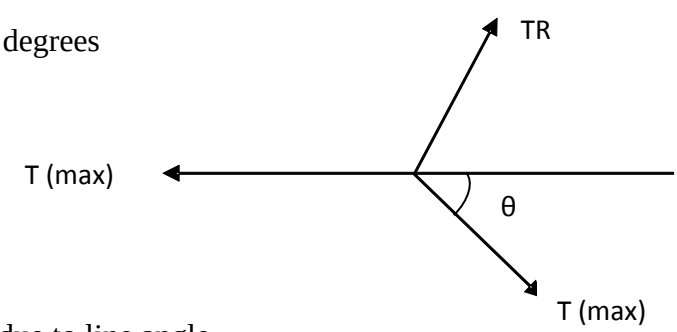

TR = Resultant Tension due to line angle
T (max) = Conductor tension under hurricane conditions

You've got the power
457 NORTH SOUND RD.
P.O. BOX 38 G.T.,GRAND CAYMAN,
CAYMAN ISLANDS, B.W.I.
TELEPHONE: (345)-945-5300/5200

DATE: , 2017	DISTRIBUTION STANDARDS	
DRAWN: C. Rose		
REV.:	STANDARD ANCHOR AND GUYING DESIGN	
DATE:		
	APPROVED BY:	STANDARD NO. 6-5
	DATE: , 2017	

Example: Structure type 3B2 using 4/0 AAC with a line angle of 35° and a 40' pole.

(1) **Resultant Tension per Conductor**:

$$= 1742 \times \frac{\sin 35°}{\sin\left(90° - \frac{35°}{2}\right)}$$

$$= 1742 \times \frac{\sin 35°}{\sin 72.5°}$$

$$= 1047.7$$

Resultant Tension due to 3 conductors = 1047.7 x 3 = 3143.1 lbs

(2) **The MINIMUM ANGLE between the guy and the pole is**:

$$\text{Min Angle} = \sin^{-1}\left[\frac{Resultant\ Tension}{Guy\ Rating}\right] = \sin^{-1}\left(\frac{3143}{7200}\right) = 25.9°$$

Or, from the previous page:

$$Min\ Guy\ Lead = \tan\left[\sin^{-1}\left(\frac{Resultant\ Tension}{Guy\ Rating}\right)\right] \times Guy\ Attachment\ Height$$

$$= \tan\left[\sin^{-1}\left(\frac{3143}{7200}\right)\right] \times 33$$

$$= \tan 25.9° \times 33$$

$$= 16.0\ ft.$$

You've got the power
457 NORTH SOUND RD.
P.O. BOX 38 G.T.,GRAND CAYMAN,
CAYMAN ISLANDS, B.W.I.
TELEPHONE: (345)-945-5300/5200

DATE: , 2017	DISTRIBUTION STANDARDS	
DRAWN: C. Rose		
REV.:	STANDARD ANCHOR AND GUYING DESIGN	
DATE:		
	APPROVED BY:	STANDARD NO. 6-6
	DATE: , 2017	

Guy and Anchor Arrangements

The anchor arrangements for standard line angles are outlined on page 6-8. The tables on pages 6-9 to 6-11 are intended for use in the selection, layout, and installation of guys and anchors for our standard structure types supporting primary and secondary conductors and communication cables.

Table Use

The tables give the number of guys, guy leads, and number of anchor rods for each standard structure type. The letter "S" in structure types denotes secondary.

The guying arrangement may vary depending on the line angle for a particular structure. For example, the maximum line angle for a 3B2S structure supporting 477 AAC is 25º. One guy for primary is adequate in this case for a maximum line angle of 10º; for line angles above 10° and up to 25º, two guys or a double guy (G2) must be used for the primary conductors. In both cases, a single guy is adequate for secondary conductors. Drawing 6-8 gives an outline of the guying arrangement for typical structures.

The guy lead is the horizontal distance from the pole to the point where the anchor rod enters the ground. Tables 6-9, 6-10 and 6-11 assume level ground between the pole and the anchor. If the ground is sloping, the guy lead should be decreased or increased accordingly.

Where two or more anchors are required, the guy lead refers to the outermost anchor; subtract 6 feet for the second and each consecutive anchor. Each anchor may have up to two guy attachments. The highest guy attachment on the structure shall be attached to the outermost anchor and other guys will be attached in similar sequence.

The guy leads listed in the tables are for the standard pole height as indicated. Add 2.5 feet to the minimum and 4.5 feet to the maximum guy leads for each extra 5 feet of pole height.

The anchor location should be chosen such that the guy lead will not be less than the minimum or exceed the maximum as determined from the tables. In the event that the minimum guy lead is not available and a reduced guy lead is available, the designer shall determine the additional requirements to ensure the structure meets the required design criteria.

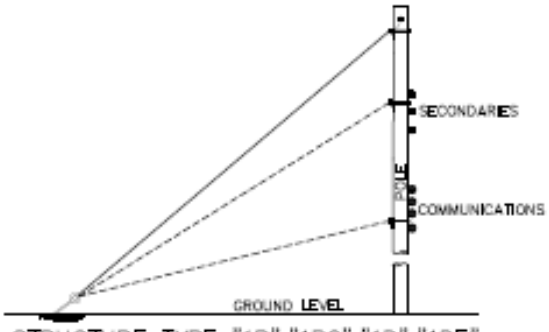

STRUCTURE TYPE "1B","1B2","1D","1DE"

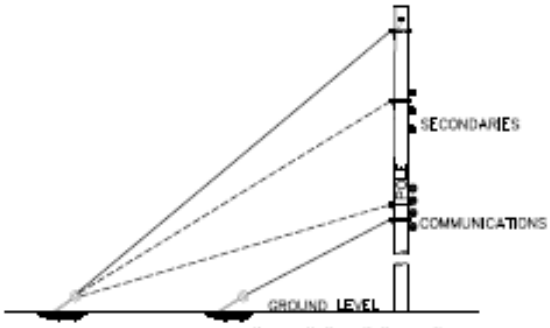

STRUCTURE TYPE "1B2","1D","1DE"

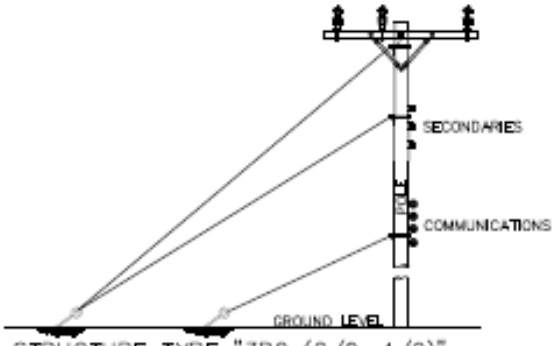

STRUCTURE TYPE "3B2 (2/0, 4/0)"

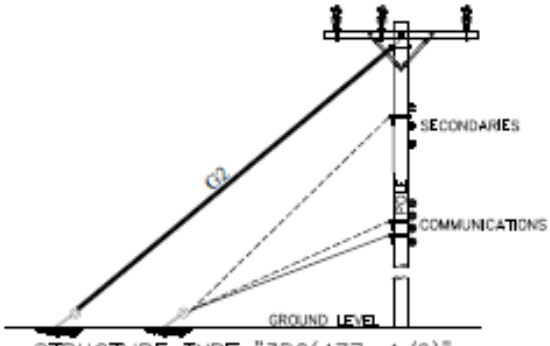

STRUCTURE TYPE "3B2(477, 4/0)"

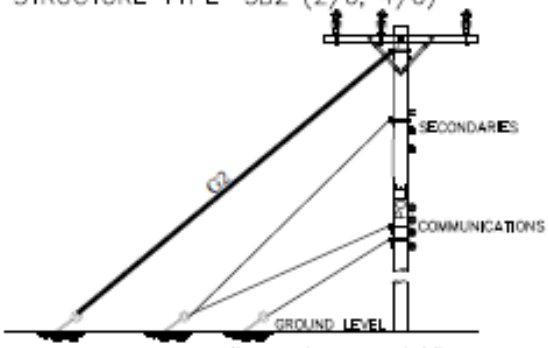

STRUCTURE TYPE "3B2 (477, 4/0)"

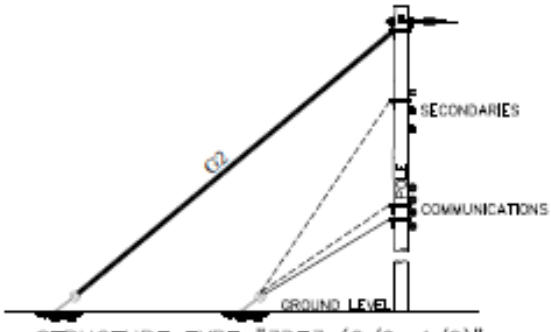

STRUCTURE TYPE "3DE3 (2/0, 4/0)"

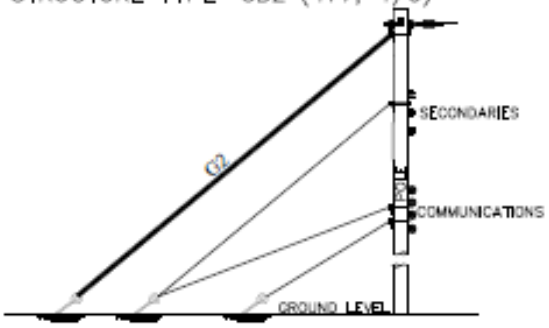

STRUCTURE TYPE "3DE3 (4/0)"

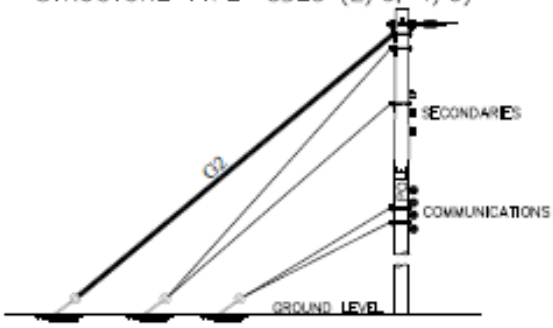

STRUCTURE TYPE "3DE3 (477)"

NOTES:

1. THIS DRAWING OUTLINES THE GUYING ARRANGEMENTS AS PER THE TABLES ON PAGE 6–9, 6–10 AND 6–11.
2. SEE TABLES PAGE 6–9, 6–10 AND 6–11 TO DETERMINE IF SECONDARY GUYING, INDICATED BY BROKEN LINES IS REQUIRED.

CUC
You've got the power
457 NORTH SOUND RD.
P.O. BOX 38 G.T., GRAND CAYMAN,
CAYMAN ISLANDS, B.W.I.
TELEPHONE: (345)-949-5300/5200

DATE: SEPT. 2017 DRAWN: S.POWER	DISTRIBUTION STANDARDS	
REV: DATE:	GUYING ARRANGEMENT FOR STANDARD STRUCTURES	
	APPROVED BY: DATE :	STANDARD NO. 6-8

GUYING ARRANGEMENT AND ANCHOR LOCATION										
STR. TYPE	POLE HEIGHT	MAX. LINE ANGLE	COMMUNICATION ATTACHMENTS (# - dia.)	NUMBER OF GUYS				GUY LEAD (ft)		NUMBER OF PISA ANCHORS
				POWER			COMM.			
				G1	G2	SEC.		MIN.	MAX.	
2/0 AAC										
1B	40'	25º		1				19	32	1
1B	40'	25º	3 - 1"	1			1	19	32	1
1BS	40'	25º		1		1		19	32	1
1BS	40'	25º	3 - 1"	1			1	24	32	1
1B2	40'	50º		1				18	32	1
1B2	40'	50º	2 - 1"	1			1	20	32	1
1B2S	40'	40º		1		1		18	32	1
1B2S	40'	40º	2 - 1"	1		1	1	18	32	2
1D	40'	60º		1				18	32	1
1D	40'	60º	2 - 1"	1			2	18	32	2
1DS	40'	40º		1		1		18	32	1
1DS	40'	40º	2 - 1"	1		1	1	18	32	2
1DE	40'	-		1				18	32	1
1DE	40'	-	2 - 1"	1			1	18	32	1
1DES	40'	-		1		1		18	32	1
1DES	40'	-	2 - 1"	1		1	1	18	32	2
3B2	45'	30º		1				22	37	1
3B2	45'	30º	2 - 1"	1			1	21	37	1
3B2	45'	50º		2				21	37	1
3B2	45'	50º	2 - 1"	1			1	35	37	1
3B2	45'	30º	3 - 1"	1			1	22	37	1
3B2	45'	20º	4 - 1"	1			1	21	37	1
3B2S	45'	30º		1		1		22	37	1
3B2S	45'	30º	2 - 1"	1		1	1	21	37	2
3B2S	45'	30º	3 - 1"	1		1	1	21	37	2
3B2S	45'	30º	4 - 1"	1		1	1	24	37	2
3B2S	45'	40º		1		1		26	37	1
3B2S	45'	40º	2 - 1"	1		1	1	25	37	2
3B2S	45'	40º	3 - 1"	1		1	1	25	37	2
3B2S	45'	40º	4 - 1"	1		1	2	25	37	2
3DE	45'	-		2				21	37	1
3DE	45'	-	2 - 1"	1			1	28	37	1
3DE	45'	-	2 - 1"	2			2	21	37	2
3DE	45'	-	3 - 1"	2			2	21	37	2
3DE	45'	-	4 - 1"	2			2	24	37	2
3DES	45'	-		1		1		24	37	1
3DES	45'	-	2 - 1"	1		1	1	24	37	2
3DES	45'	-	3 - 1"	1		1	1	24	37	2
3DES	45'	-	4 - 1"	1		1	2	27	37	2

CUC
You've got the power
457 NORTH SOUND RD.
P.O. BOX 38 G.T.,GRAND CAYMAN,
CAYMAN ISLANDS, B.W.I.
TELEPHONE: (345)-945-5300/5200

DATE: , 2017	**DISTRIBUTION STANDARDS**	
DRAWN: C. Rose		
REV.:	**GUYING ARRANGEMENT AND ANCHOR LOCATION – 2/0 AAC**	
DATE:		
	APPROVED BY:	**STANDARD NO. 6-9**
	DATE: , 2017	

GUYING ARRANGEMENT AND ANCHOR LOCATION										
STR. TYPE	POLE HEIGHT	MAX. LINE ANGLE	COMMUNICATION ATTACHMENTS (# - dia.)	NUMBER OF GUYS				GUY LEAD (ft)		NUMBER OF PISA ANCHORS
				POWER			COMM.			
				G1	G2	SEC.		MIN.	MAX.	
4/0 AAC										
3B2	45'	20º		1				21	37	1
3B2	45'	20º	2 - 1"	1			1	21	37	1
3B2	45'	20º	3 - 1"	1			1	21	37	1
3B2	45'	20º	4 - 1"	1			1	23	37	1
3B2S	45'	20º		1		1		21	37	1
3B2S	45'	20º	2 - 1"	1		1	1	21	37	2
3B2S	45'	20º	3 - 1"	1		1	1	21	37	2
3B2S	45'	20º	4 - 1"	1		1	1	25	37	2
3B2	45'	40º			1			21	37	1
3B2	45'	40º	2 - 1"		1		1	21	37	2
3B2	45'	40º	3 - 1"		1		2	21	37	2
3B2	45'	40º	4 - 1"		1		2	21	37	2
3B2S	45'	40º			1	1		21	37	2
3B2S	45'	40º	2 - 1"		1	1	1	23	37	2
3B2S	45'	40º	3 - 1"		1	1	2	22	37	3
3B2S	45'	40º	4 - 1"		1	1	2	25	37	3
3DE3	45'	-			1			21	37	1
3DE3	45'	-	2 - 1"		1		2	21	37	2
3DE3	45'	-	2 - 1"		1		1	28	37	2
3DE3	45'	-	3 - 1"		1		2	21	37	2
3DE3	45'	-	4 - 1"		1		2	24	37	2
3DE3S	45'	-			1	1		25	37	2
3DE3S	45'	-	2 - 1"		1	1	1	28	37	2
3DE3S	45'	-	2 - 1"		1	1	2	23	37	3
3DE3S	45'	-	3 - 1"		1	1	2	26	37	3
3DE3S	45'	-	4 - 1"		1	1	2	32	37	3

CUC
You've got the power
457 NORTH SOUND RD.
P.O. BOX 38 G.T.,GRAND CAYMAN,
CAYMAN ISLANDS, B.W.I.
TELEPHONE: (345)-945-5300/5200

DATE: , 2017

DRAWN: C. Rose

REV.:

DATE:

APPROVED BY: C. Rose

DATE: , 2017

DISTRIBUTION STANDARDS

GUYING ARRANGEMENT AND ANCHOR LOCATION – 4/0 AAC

STANDARD NO. 6-10

GUYING ARRANGEMENT AND ANCHOR LOCATION										
STR. TYPE	POLE HEIGHT	MAX. LINE ANGLE	COMMUNICATION ATTACHMENTS (# - dia.)	NUMBER OF GUYS				GUY LEAD (ft)		NUMBER OF PISA ANCHORS
				POWER			COMM.			
				G1	G2	SEC.		MIN.	MAX.	
477 AAC										
3B2	45'	10º		1				22	37	1
3B2	45'	10º	2 - 1"	1			1	21	37	1
3B2	45'	10º	3 - 1"	1			1	22	37	1
3B2	45'	10º	4 - 1"	1			1	23	37	1
3B2S	45'	10º		1		1		21	37	1
3B2S	45'	10º	2 - 1"	1		1	1	21	37	2
3B2S	45'	10º	3 - 1"	1		1	1	21	37	2
3B2S	45'	10º	4 - 1"	1		1	1	21	37	2
3B2	45'	25º			1			21	37	1
3B2	45'	25º	2 - 1"		1		1	21	37	2
3B2	45'	25º	3 - 1"		1		1	22	37	2
3B2	45'	25º	4 - 1"		1		2	22	37	2
3B2S	45'	25º			1	1		21	37	2
3B2S	45'	25º	2 - 1"		1	1	1	21	37	2
3B2S	45'	25º	3 - 1"		1	1	1	23	37	2
3B2S	45'	25º	4 - 1"		1	1	1	32	37	2
3B2S	45'	25º	4 - 1"		1	1	2	21	37	3
3DE3	45'	-			1			36	37	1
3DE3	45'	-		1	1			21	37	2
3DE3	45'	-	2 - 1"	1	1		1	28	37	2
3DE3	45'	-	3 - 1"		1		2	36	37	2
3DE3	45'	-	3 - 1"	1	1		2	22	37	3
3DE3	45'	-	4 - 1"	1	1		2	28	37	3
3DE3S	45'	-		1	1	1		26	37	2
3DE3S	45'	-	2 - 1"	1	1	1	2	25	37	3
3DE3S	45'	-	3 - 1"	1	1	1	2	28	37	3
3DE3S	45'	-	4 - 1"		1	1	2	35	37	3

You've got the power
457 NORTH SOUND RD.
P.O. BOX 38 G.T.,GRAND CAYMAN,
CAYMAN ISLANDS, B.W.I.
TELEPHONE: (345)-945-5300/5200

DATE: , 2017	**DISTRIBUTION STANDARDS**	
DRAWN: C. Rose		
REV.:	**GUYING ARRANGEMENT AND ANCHOR LOCATION – 477 AAC**	
DATE:		
	APPROVED BY: C. Rose	**STANDARD NO. 6-11**
	DATE: , 2017	

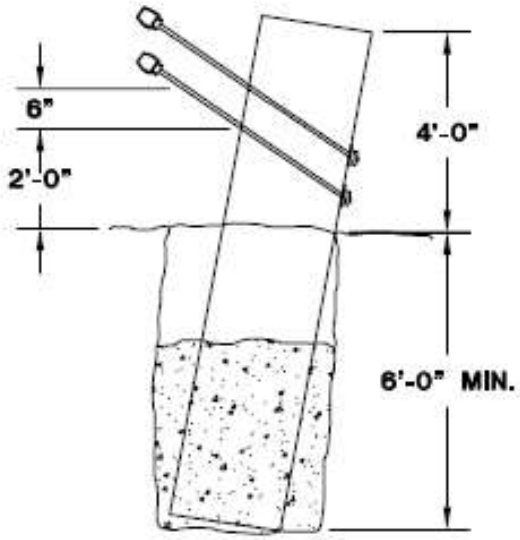

ANCHOR STUB

NOTES:

1. THE ANCHOR STUB HAS BEEN USED EXTENSIVELY WHERE ANCHOR SECURITY AND STRENGTH IS REQUIRED; IT IS HOWEVER SOMEWHAT EXPENSIVE AND SHOULD BE USED ONLY WHEN SPECIFICALLY REQUIRED.

2. A HOLE, APPROXIMATELY 24" IN DIAMETER AND DUG TO A DEPTH OF 6'-0" SHALL BE USED FOR THE STUB ANCHOR, THE WOOD STUB SHOULD BE TIPPED AWAY FROM THE POLE AS SHOWN AND THE HOLE FILLED WITH CONCRETE. TO WITHIN ABOUT 4" OF THE GROUND LINE- LEAVE ROOM FOR TOPSOIL AND LANDSCAPING.

3. THE WOOD STUB SHALL BE 10'-0" IN LENGTH AND NOT LESS THAN 10" IN DIAMETER.

4. TRIPLE EYE ANCHOR BOLTS (3/4" X 30") SHALL BE USED FOR THE GUY ATTACHMENT; ONE OR TWO BOLTS INSTALLED AS SHOWN.

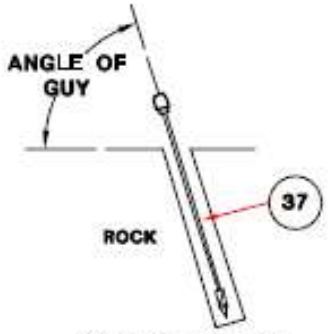

30" ROCK ANCHOR

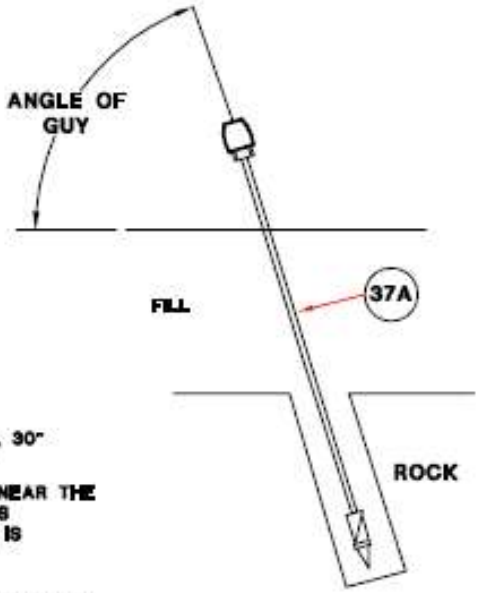

7'-0" ROCK ANCHOR

NOTES:

5. THE EXPANDING SHELL ROCK ANCHOR IS USED FOR ANCHORING IN ROCK; THERE ARE TWO SIZES AVAILABLE, 30" AND 7'-0".

6. THE 30" ANCHOR IS SUITABLE WHERE THE ROCK IS NEAR THE SURFACE; THE 7'-0" ANCHOR IS USED WERE THE ROCK IS COVERED WITH FILL OR TOPSOIL AND WHERE THE ROCK IS NOT GOOD QUALITY (SOFT OR SHATTERED).

7. THESE ANCHORS SHALL BE INSTALLED IN LINE WITH THE GUY ATTACHMENT LOCATION ON THE POLE.

8. THESE ANCHORS ARE INSTALLED BY PLACING THE ANCHOR IN A 1 7/8" HOLE, DRILLED IN THE ROCK, AND TURN THE ROD (WITH A BAR THROUGH THE EYE OF THE ANCHOR ROD) UNTIL THE ANCHOR IS FIRMLY EXPANDED AGAINST THE SIDES OF THE HOLE.

ITEM NO.	QNTY.	MATERIAL	STOCK NO.
37	1	ROCK ANCHOR 3/4"x30"	029-00003
37A	1	ROCK ANCHOR 3/4"x7'	029-00004

CARIBBEAN UTILITIES COMPANY, LTD.

PROJECT
CUC STANDARDS

DRAWING
STUB & ROCK ANCHOR

DATE:	Jan. 2011	PROJECT #	CUC SC
SCALE:	NTS	DRAWING #	6-12
DRAWN BY:	DM	SHEET #	01 OF 01
CHECKED BY:	CUC SC	REV. #	A
APPROVED BY:	CUC SC	A	AUGUST 2010
		REV	REVISION DESCRIPTION

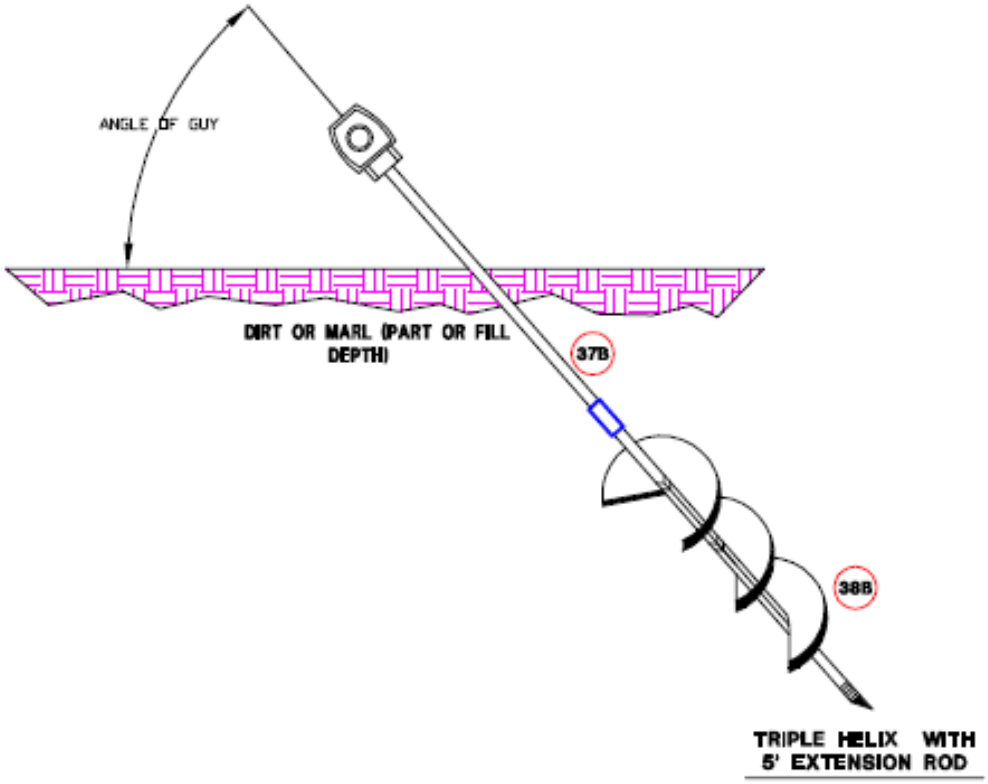

NOTES:

1. THE 8", 10" & 12" TRIPLE HELIX SHALL BE USED WHERE POOR SOIL CONDITIONS EXISTS, SUCH AS SAND, MUD OR WET MARL.

2. THE STANDARD EXTENSION ROD USED WITH THESE ANCHOR HELIX IS 5'-0"

3. THESE ANCHORS SHALL BE INSTALLED IN LINE WITH THE GUY ATTACHMENT LOCATION ON THE POLE (A) TOP OF POLE OR (B) AT THE SECONDARY LOCATION

4. THE ANCHOR SHOULD PENETRATE AT LEAST 3 FEET OF COMPACT SOIL TO ENSURE ADEQUATE HOLDING STRENGTH

5. INSTALLATION MUST BE INSTALLED WITH THE EXTENSION

ITEM NO.	QNTY.	MATERIAL	STOCK NO.
38B	1	ANCHOR HELIX 8"-10"-12"	029-00007
37B	1	EXTENSION 5FT	029-00005

CARIBBEAN UTILITIES COMPANY, LTD.
427 North Sound Rd.
P.O. Box 30 G.T., Grand Cayman, Cayman Islands, BWI
Telephone: (345) 949-5365/360
Facsimile: (Admin.) (345) 949-4521, Purch 949-5203
Email: Sparky@cuc-cayman.com
Email: www.cuc-cayman.com

PROJECT

CUC STANDARDS

DRAWING

TRIPLE HELIX SWAMP ANCHOR INSTALLATION

DATE:	Jan. 2011	PROJECT #	CUC SC
SCALE:	NTS	DRAWING #	6-13
DRAWN BY:	DM	SHEET #	01 OF 01
CHECKED BY:	CUC SC	REV. #	A
APPROVED BY:	CUC SC	A	AUGUST 2010
		REV.	REVISION DESCRIPTION

ANCHOR(S) SHALL BE PLACED SO THAT GUY WILL BISECT ANGLES AS SHOWN (SEE PAGE 6–16).

STRUCTURE TYPES
B, B2, & D
(LINE ANGLES UP TO 60°)

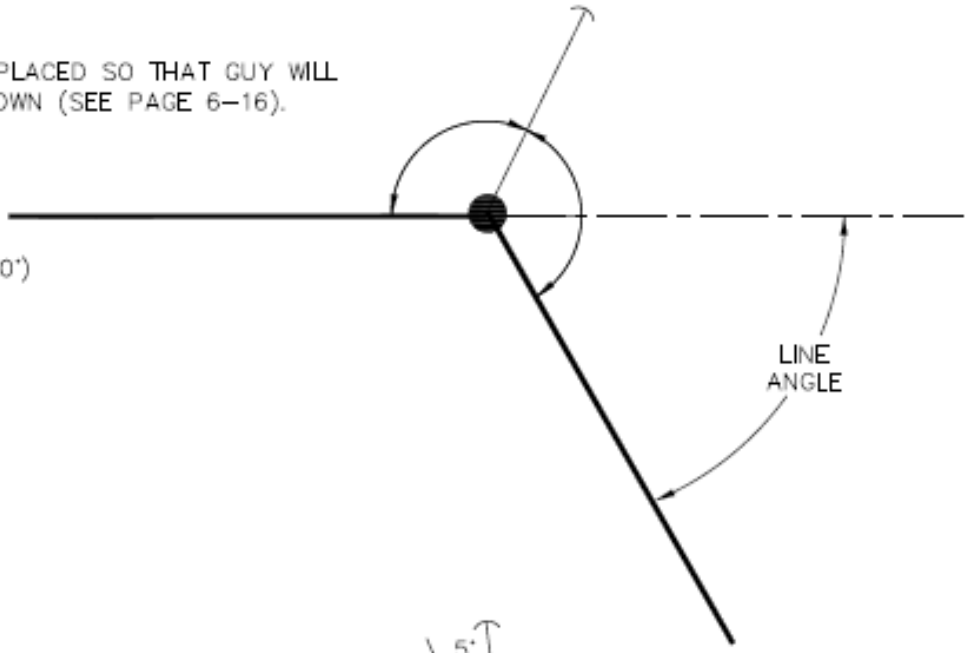

ANCHOR(S) SHALL BE PLACED OFF LINE AS SHOWN
(5° = ONE INCH PER FOOT OF GUY LEAD)

STRUCTURE TYPE DV
(LINE ANGLES 50° TO 90°)

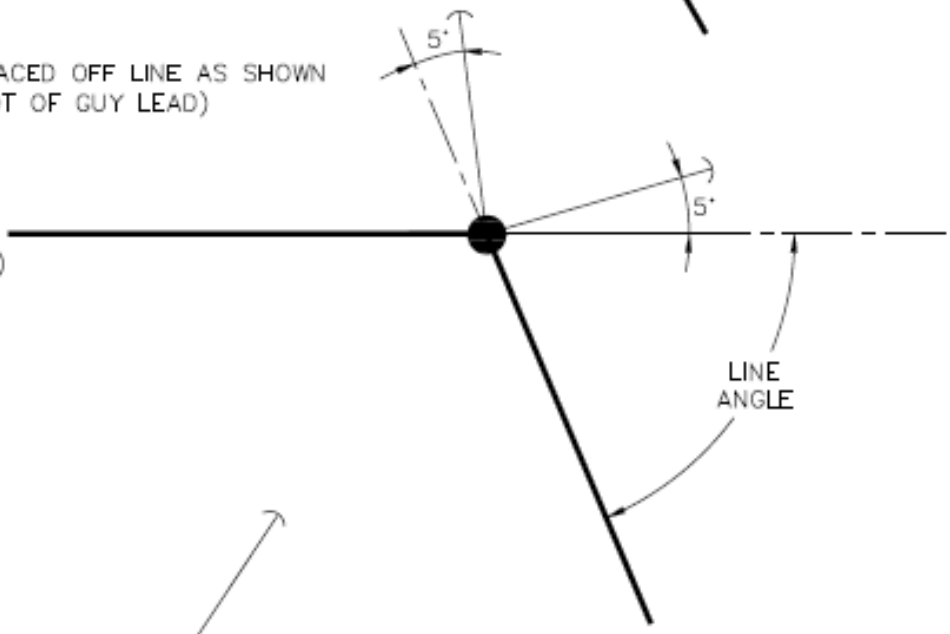

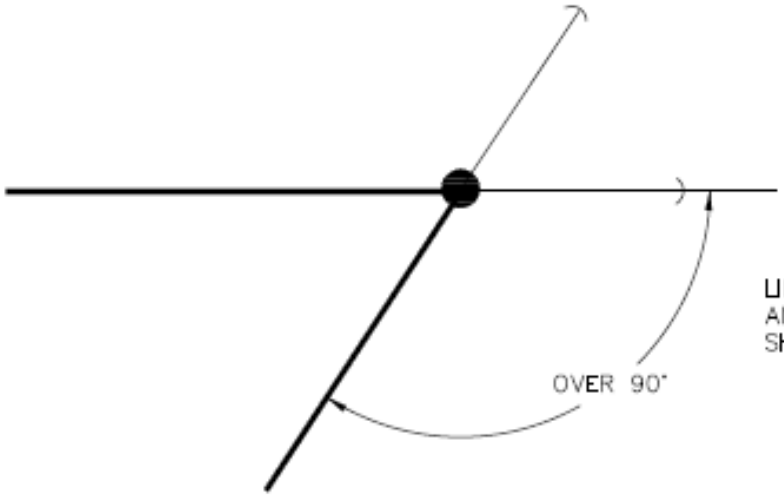

LINE ANGLE OVER 90° (DEADENDED) ANCHORS SHALL BE PLACED IN LINE AS SHOWN.

CUC
You've got the power
457 NORTH SOUND RD.
P.O. BOX 38 G.T., GRAND CAYMAN,
CAYMAN ISLANDS, B.W.I.
TELEPHONE: (345)-949-5300/5200

DATE: SEPT. 2017 DRAWN: S.POWER	DISTRIBUTION STANDARDS	
REV: DATE:	LOCATING ANCHORS STANDARD STRUCTURE TYPES	
	APPROVED BY: DATE :	STANDARD NO. 6-14

LINE TERMINATION
STRUCTURE TYPES
DE, T, & SE

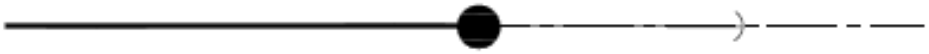

ENSURE ANCHOR IS IN LINE WITH
TERMINATION
POLE & SPAN.

LINE TERMINATION STRUCTURE
WITH LARGE TRANSFOMER
BANK

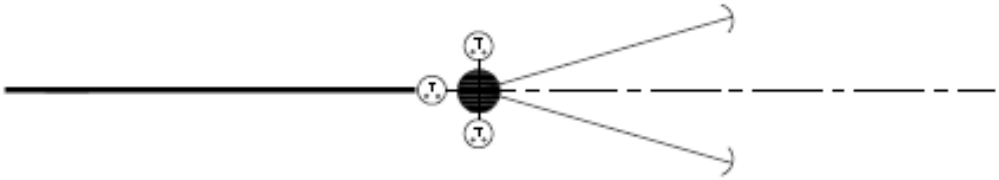

TWO ANCHORS SHALL BE USED TO STABILIZED STRUCTURE,
PARTICULARLY FOR POOR SOIL CONDITIONS; WHERE PRACTICAL
LOCATE ANCHORS 6'–10' APART.

CUC
You've got the power
457 NORTH SOUND RD.
P.O. BOX 38 G.T., GRAND CAYMAN,
CAYMAN ISLANDS, B.W.I.
TELEPHONE: (345)-949-5300/5200

DATE: SEPT. 2017 DRAWN: S.POWER	DISTRIBUTION STANDARDS	
REV: DATE:	LOCATING ANCHORS STANDARD DEADEND STRUCTURE	
	APPROVED BY: DATE :	STANDARD NO. 6-15

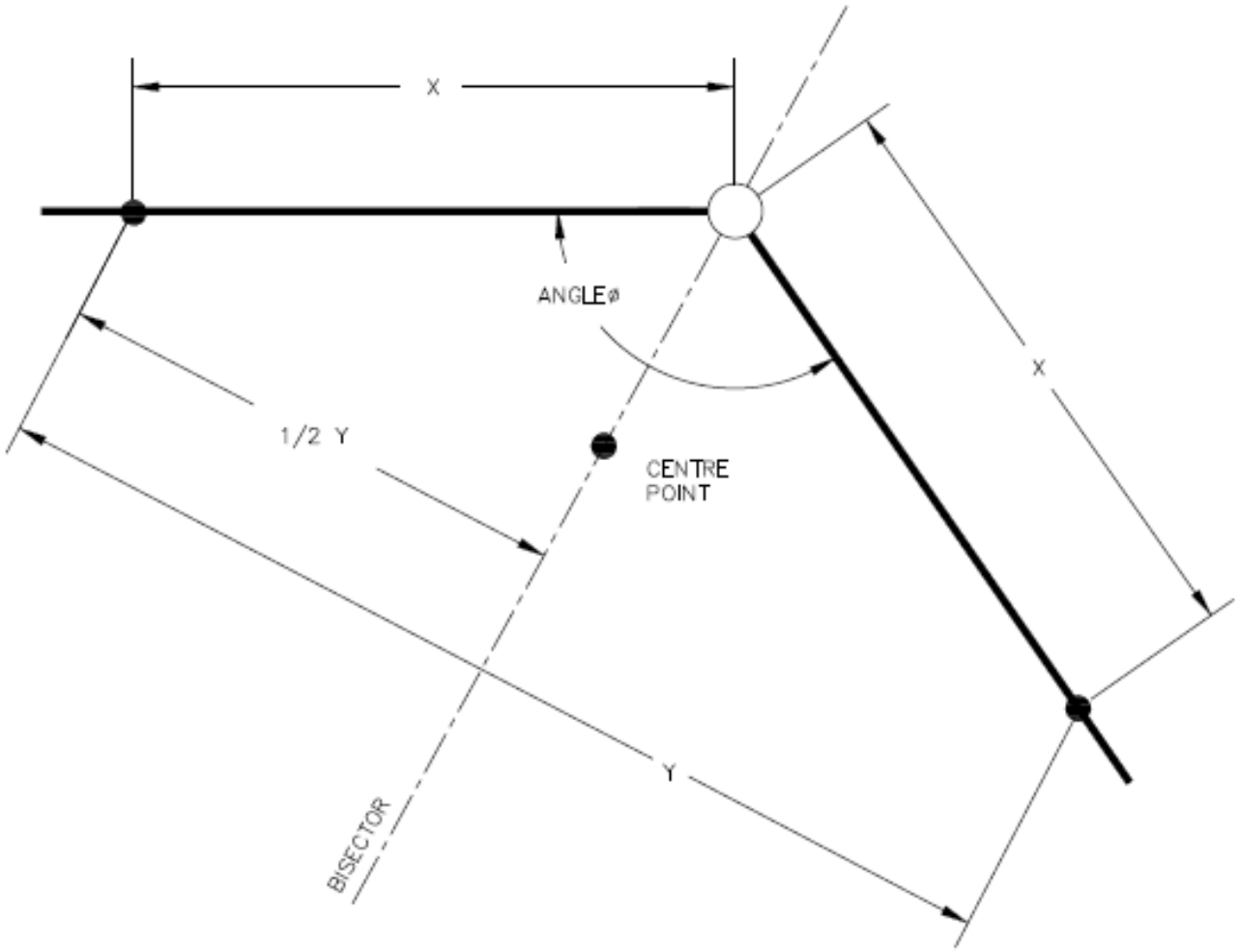

MEASURE A DISTANCE (X) ALONG EACH LINE TANGENT AND MARK.

MEASURE BETWEEN MARKS, THE DISTANCE Y, AND MARK THE CENTRE POINT (1/2 Y); THIS IS THE BISECTOR OF THE ANGLE ø.

THE ANCHOR LOCATION WILL BE IN LINE WITH THE CENTRE POINT OF DISTANCE Y AND THE POLE. (THE BISECTOR OF ANGLE ø).

CUC
You've got the power
457 NORTH SOUND RD.
P.O. BOX 38 G.T., GRAND CAYMAN,
CAYMAN ISLANDS, B.W.I.
TELEPHONE: (345)-949-5300/5200

DATE: SEPT. 2017 DRAWN: S.POWER	DISTRIBUTION STANDARDS	
REV: DATE:	LOCATING BISECTOR FOR ANCHOR LOCATION	
	APPROVED BY: DATE :	STANDARD NO. 6-16

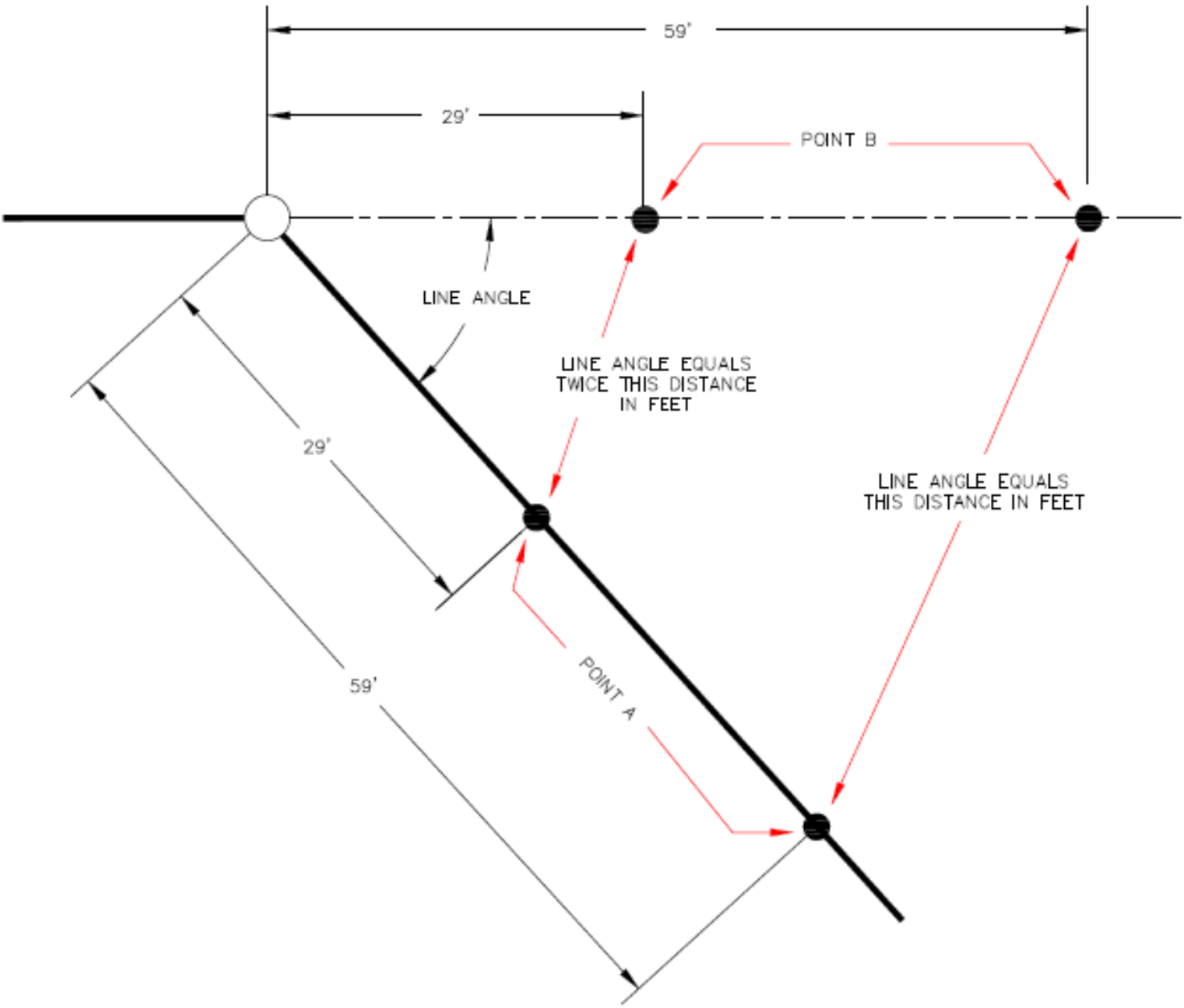

THE ABOVE DRAWING SHOWS A SIMPLE METHOD FOR MEASURING LINE ANGLES WITH A MEASURING TAPE—THIS METHOD IS ALSO QUITE ACCURATE. FIRST MEASURE A DISTANCE OF 29 FEET WITH THE LINE AND MARK (POINT A); THEN MEASURE A DISTANCE OF 29 FEET ALONG THE PROJECTED TANGENT AND MARK (POINT B). THE LINE ANGLE (DEGREES) IS TWICE THE DISTANCE, IN FEET, FROM POINT A TO POINT B. (FOR A DISTANCE OF 12 FEET, THE LINE ANGLE IS 24').

ALTERNATIVELY IF WE MEASURE 59 FEET TO POINT A & B, THE DISTANCE BETWEEN POINTS (IN FEET) IS THE ACTUAL LINE ANGLE (FOR A DISTANCE OF 24' THE LINE ANGLE IS 24').

CUC
You've got the power
457 NORTH SOUND RD.
P.O. BOX 38 G.T., GRAND CAYMAN,
CAYMAN ISLANDS, B.W.I.
TELEPHONE: (345)-949-5300/5200

DATE: SEPT. 2017 DRAWN: S.POWER	DISTRIBUTION STANDARDS	
REV: DATE:	MEASURING LINE ANGLES	
	APPROVED BY: DATE :	STANDARD NO. 6-17

Non-Standard Guying Arrangement

The guy attachment point is specified for each structure type and includes variations for conductor size and guy leads. There will be, however, occasions where: (a) the guy location is not in accordance with the standards and the pole strength needs to be checked, or (b) it may be desirable to alter the guy location in specific instances because of clearance problems.

For example, let's assume we have; structure type 3B2, 4/0 conductor, 25º line angle, a 40ft class 4 pole, 200' wind span and a 200' ruling span and the guy attachment point must be installed at 3 feet below the crossarm. The structure loading and the pole strength can be determined, at the desired guying location, in accordance with the following calculations:

(A) The structure loading can be determined (see page 2-4/5, 2-8/9 & 6-3) as follows:

The combined load (page 6-3) is 1008 lbs/conductor. The bending moment due to this conductor load is: 3 conductors x 1008 lbs/conductor x 3'0" moment arm = 3 x 1008 x 3 = **9072 ft-lbs.**

(B) The resisting moment of the pole can be determined form the formula on page 2-3 ($M_r = K_r F_b C_g^3$).

The circumference at the desired guy location can be determined as follows: from page 3-2 the circumference is 21" at the top of the pole and 33.5" at the ground line; the total pole length above the desired guy location is 3'9"; and the total pole length above ground is 34ft. The pole circumference at the desired location is:

$$21 + (33.5 - 21)/33.5 \times 3.75 = 21 + 1.4 = 22.4 \text{ inches}$$

The resisting moment (M_r) at the desired guy location is $M_r = (0.000264) \times (8000) \times (22.4)^3 = 23{,}738$ ft-lbs. The load due to the wind on the pole can be neglected, however a safety factor of 3.0 minimum should normally be used. The design resistant moment now becomes 23,738/3 = **7,913 ft-lbs**.

The actual structure loading is 9,072 ft-lbs; therefore the pole strength for a class 4 pole is not adequate for this load. The design resistant moment for a 40ft class 3 pole is 10,227 ft-lbs and can therefore support the load of 8,955 ft-lbs.

Although a class 3 pole can support this load, with the guy located 3'0" from the crossarm, permanent deformation will occur in the pole and should only be used when absolutely necessary.

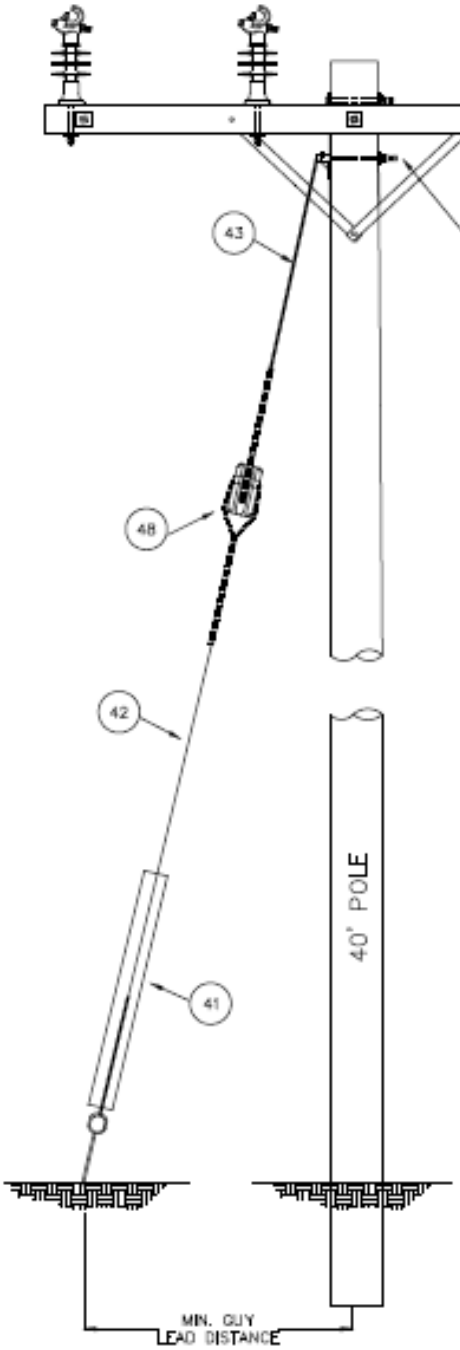

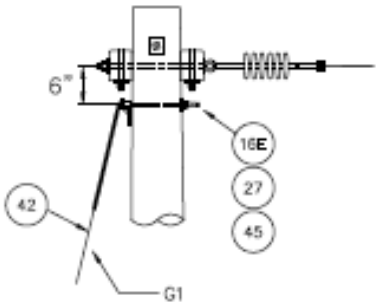

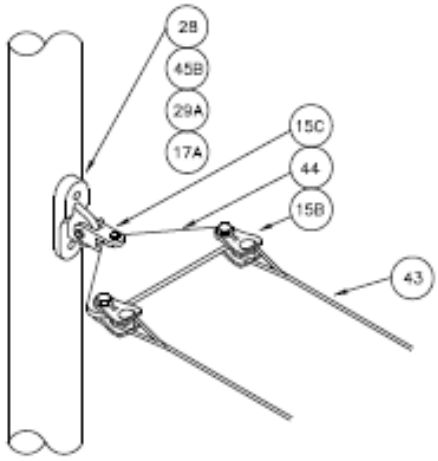

DOUBLE GUY ATTACHMENT
TYPE G2

NOTES:

1. GUY TYPE 'G1' IS A STANDARD SINGLE DOWN GUY.
2. GUY TYPE 'G2' IS A STANDARD DOUBLE DOWN GUY.
3. SEE PAGE 6 – 22 FOR GUY STRAIN INSULATOR INSTALLATION DETAILS AND REQUIREMENTS.

ITEM NO.	QUANTITY G1	QUANTITY G2	MATERIAL	STOCK NO.
17A		2	BOLT – MACH, 3/4" X 12", Galv.	098–00009
29A		2	WASHER – LOCK, 3/4"	973–00017
28		2	WASHER – CURVED, 3", 13/16" HOLE	973–00001
45		1	TEE – POLE EYE	
43	2	4	GRIP – PREFORMED GUY, ALUMINIZED STEEL, 3/8"	408–00001
42	AR	AR	STRAND – GUY, ALUMINIZED STEEL, 3/8"	983–00002
41	1	2	GUARD – GUY, PLASTIC	411–00001
44		1	PLATE – GUY YOKE	
80D		1	CRIMPIT – CABELOK, ALUM, 4/0–2	253–00005
73B		1	TERMINAL – COMPRESSION PIN, ALUM 4/0	783–00002
15C		1	CLEVIS – CLEVIS, 90	
15B		2	CLEVIS – THIMBLE	185–00003
16E	1		BOLT–MACH, 5/8 X 12"	098–00015
27	1		WASHER–SQUARE, 2 1/4"	973–00005
45	1		HOOK–GUY	473–00001
48	1		INSULATOR – PORCELAIN GUY	457–00009
22	1		NUT – SQUARE 5/8"	565–00005
112	1		CUP – GROUND WIRE	188–00003
78B	1		CRIMPET – C TYPE	253–00004

CUC
You've got the power
457 NORTH SOUND RD.
P.O. BOX 38 G.T., GRAND CAYMAN,
CAYMAN ISLANDS, B.W.I.
TELEPHONE: (345)-949-5300/5200

DATE: SEPT. 2017
DRAWN: S.POWER
REV:
DATE:

DISTRIBUTION STANDARDS

STANDARD GUY TYPE G1 & G2

APPROVED BY:
DATE :

STANDARD NO.
6-19

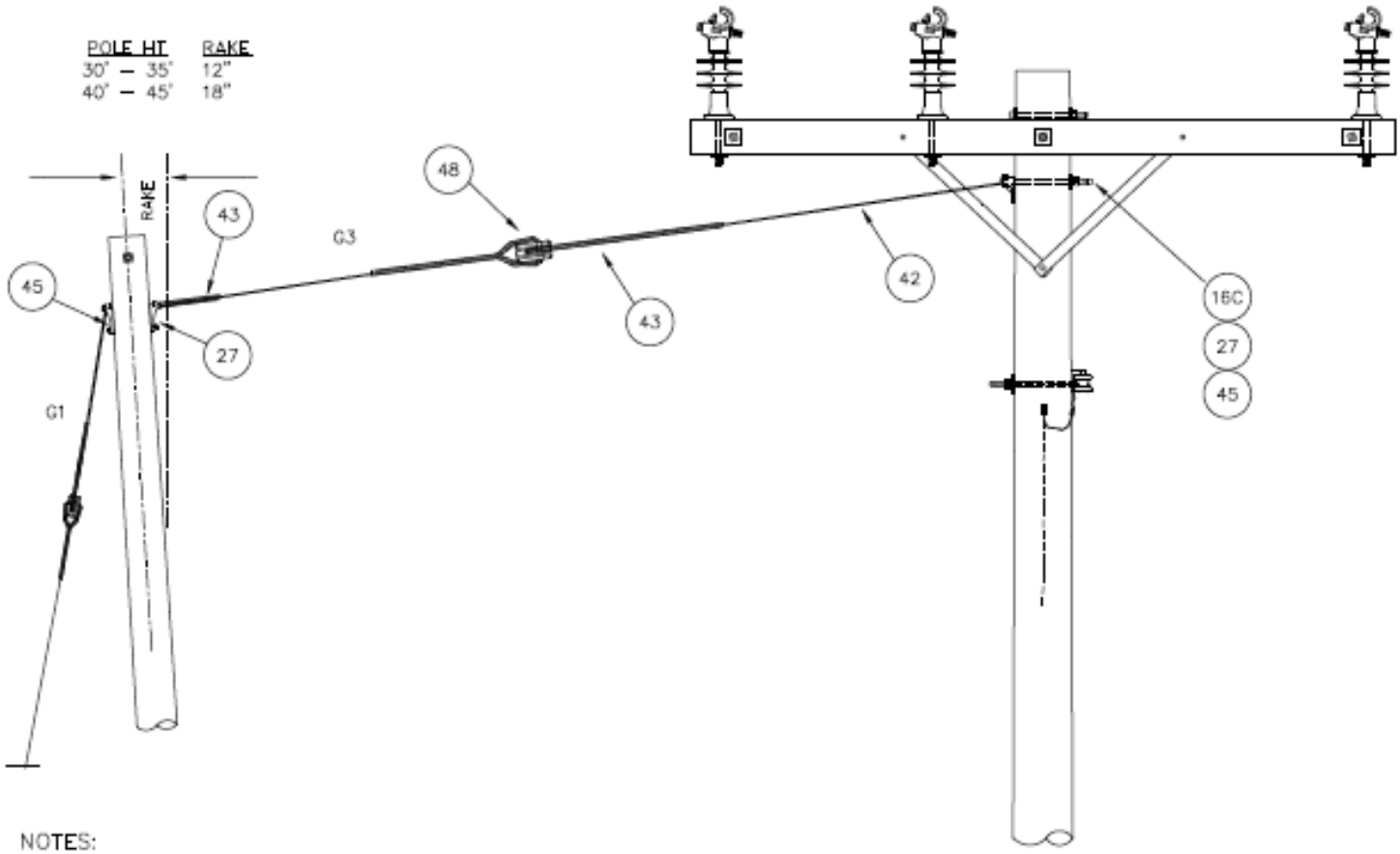

NOTES:

1. GUY TYPE G3 IS A STANDARD OVERHEAD GUY.
2. EACH OVERHEAD GUY WILL REQUIRE A DOWN GUY (G1) UNLESS CALCULATIONS HAVE BEEN MADE TO DETERMINE OTHERWISE.
3. THE NUMBER OF GUYS REQUIRED ON EACH STRUCTURE TYPE IS SPECIFIED IN SECTION 6 AND 8.

ITEM NO.	QUANTITY OR		MATERIAL	STOCK NO.
16C		1	BOLT–MACH. 5/8 X 12"	098–00015
27		1	WASHER–SQUARE 2 1/4"	973–00005
45		1	HOOK–GUY	437–00001
42		AR	STRAND–GUY 3/8"	983–00002
43		2	GRIP, PREFORMED GUY 3/8"	408–00001
48	1	1	INSULATOR – PORCELAIN GUY	457–00009

CUC
You've got the power
457 NORTH SOUND RD.
P.O. BOX 38 G.T., GRAND CAYMAN,
CAYMAN ISLANDS, B.W.I.
TELEPHONE: (345)-949-5300/5200

DATE: SEPT. 2017
DRAWN: S.POWER
REV:
DATE:

DISTRIBUTION STANDARDS

STANDARD OVERHEAD GUY TYPE G3

APPROVED BY:
DATE :

STANDARD NO. 6-20

NOTES:

1. GUY TYPE G4 IS A STANDARD SIDEWALK GUY ARRANGEMENT.
2. ANCHOR IS NORMALLY LOCATED ON THE INSIDE OF THE SIDEWALK AND THE POLE ON THE OUTSIDE.
3. THIS GUY TYPE IS NOT ADEQUATE FOR USE ON DEADENDS PRIMARY OR SECONDARY.
4. THE STRENGTH OF THIS GUY IS LIMITED TO THE FOLLOWING VALUES:

SECONDARY		15 Degree LINE ANGLE
SINGLE PHASE	(2/0)	25 Degree LINE ANGLE
THREE PHASE	(2/0)	15 Degree LINE ANGLE
THREE PHASE	(4/0)	10 Degree LINE ANGLE
THREE PHASE	(477)	5 Degree LINE ANGLE

ITEM NO.	QUANTITY	MATERIAL	STOCK NO.
16C	1	BOLT–MACH, 5/8 X 12"	098–00015
26	2	SCREW–LAG 1/2 X 4	744–00002
27	1	WASHER–SQ. 2 1/4"	973–00005
40	1	FITTING–SIDEWALK GUY, POLE PLATE	352–00001
40A	1	FITTING–SIDEWALK GUY, GUY END	352–00002
41	1	GUARD–GUY PLASTIC	411–00001
42	AR	STRAND–GUY 3/8"	983–00002
43	2	GRIP–PREFORMRD GUY 3/8"	408–00001
44	AR	PIPE–GALV. STEEL 2"	–
45	1	HOOK – GUY	473 –00001
48	1	INSULATOR – PORCELAIN GUY	457–00009

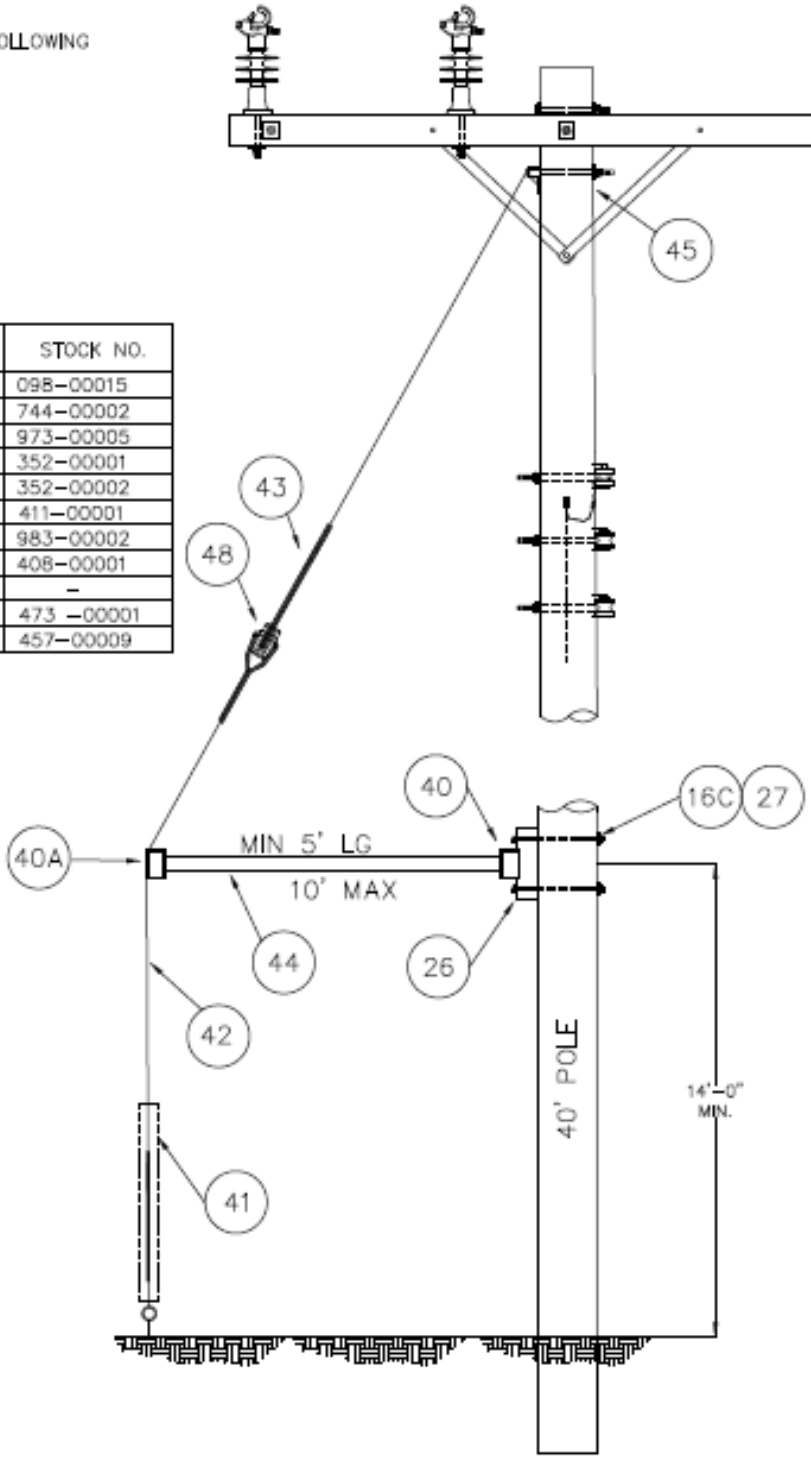

CUC
You've got the power
457 NORTH SOUND RD.
P.O. BOX 38 G.T., GRAND CAYMAN,
CAYMAN ISLANDS, B.W.I.
TELEPHONE: (345)-949-5300/5200

DATE: SEPT. 2017 DRAWN: S.POWER	DISTRIBUTION STANDARDS	
REV: DATE:	SIDEWALK GUY TYPE G4	
	APPROVED BY: DATE :	STANDARD NO. 6-21

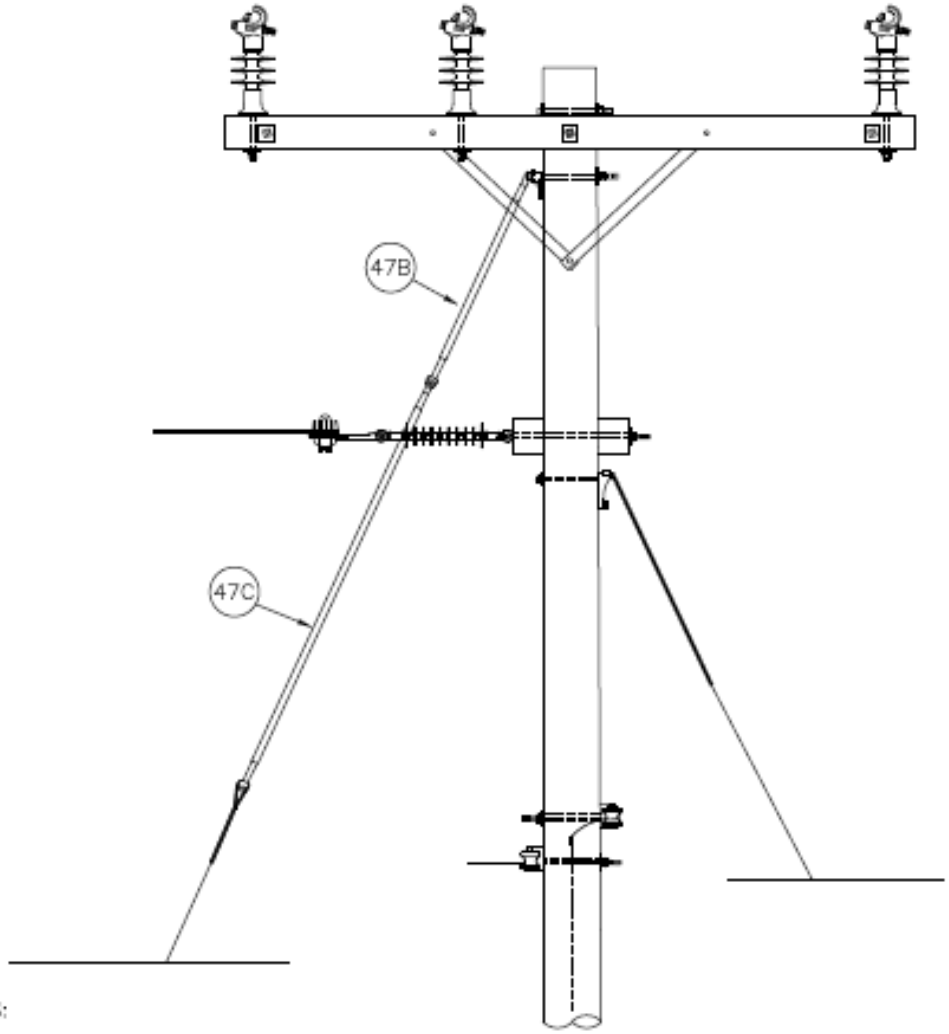

NOTES:

1. MAIN LINE STRUCTURES REQUIRING GUYS, WILL PROBABLY REQUIRE THIS GUY REGARDLESS OF WHETHER THERE IS ALSO A THREE PHASE TAP IN THE SAME DIRECTION.

2. IN THESE SITUATIONS WHERE A THREE PHASE TAP AND A DOWN GUY ARE REQUIRED ON THE SAME SIDE OF THE STRUCTURE AND A CLEARANCE OF 7 INCHES CANNOT BE OBTAINED BETWEEN THE CENTRE PHASE AND THE GUY (WITH GUY STRAIN INSULATOR) TWO ALTERNATIVES ARE AVAILABLE:

(a) AN EXTENSION LINK CAN BE USED TO EXTEND THE DEADEND INSULATOR OUTSIDE THE DOWN GUY (USE 24 INCH GUY STRAIN INSULATOR, ITEM #47B)

(b) THE CENTER PHASE CONDUCTOR CAN BE RELOCATED AWAY FROM THE POLE (INSTALL ADDITIONAL D/A BOLT)

3. WHEN AN OVERHEAD GUY IS REQUIRED FOR THE STRUCTURE GUYING, A GUY STRAIN INSULATOR IS REQUIRED AT BOTH ENDS OF THE OVERHEAD GUY, SEE PAGE 6–23.

4. A MINIMUM OF 7 INCHES CLEARANCE SHOULD BE MAINTAINED (5.25" TO INSULATED POSITION) BETWEEN A GUY STRAIN INSULATOR AND AN ENERGIZED CONDUCTOR.

ITEM NO.	QNTY.	MATERIAL	STOCK NO.
47B	1	INSULATOR (LINK) – GUY STRAIN – 24"	457–00003
47C	1	INSULATOR (LINK) – GUY STRAIN – 54"	457–00002

CUC
You've got the power
457 NORTH SOUND RD.
P.O. BOX 38 G.T., GRAND CAYMAN,
CAYMAN ISLANDS, B.W.I.
TELEPHONE: (345)-949-5300/5200

DATE: SEPT. 2017
DRAWN: S.POWER
REV:
DATE:

DISTRIBUTION STANDARDS

GUYING WITH GUY STRAIN INSULATORS

APPROVED BY:
DATE :

STANDARD NO.
6-22

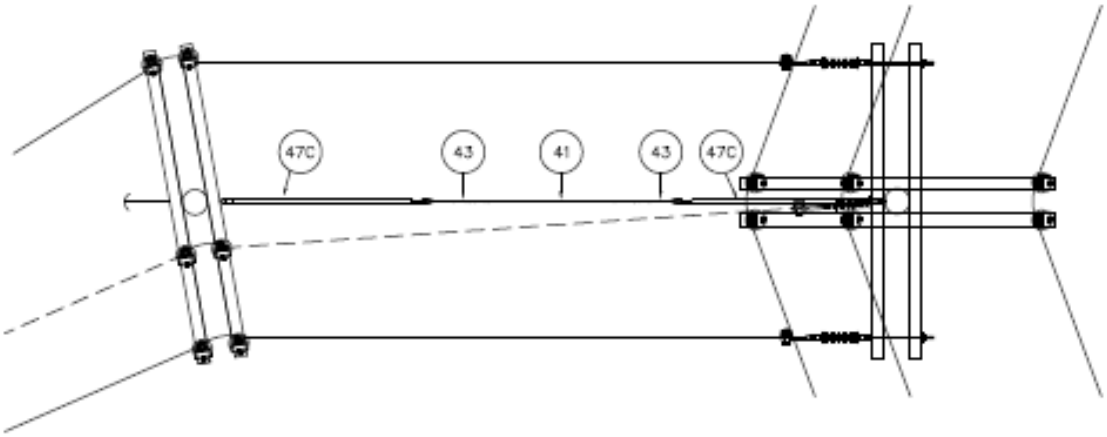

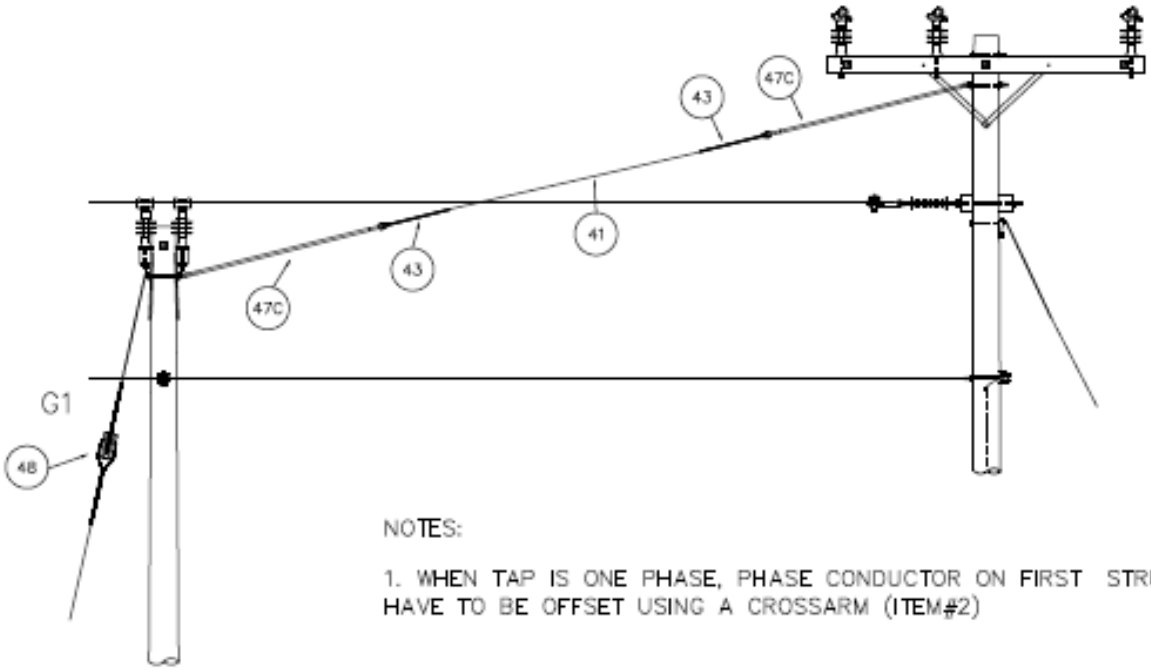

NOTES:

1. WHEN TAP IS ONE PHASE, PHASE CONDUCTOR ON FIRST STRUCTURE WILL HAVE TO BE OFFSET USING A CROSSARM (ITEM#2)

CUC
You've got the power
457 NORTH SOUND RD.
P.O. BOX 38 G.T., GRAND CAYMAN,
CAYMAN ISLANDS, B.W.I.
TELEPHONE: (345)-949-5300/5200

DATE: NOV. 2017 DRAWN: S.POWER	DISTRIBUTION STANDARDS	
REV: DATE:	OVERHEAD GUYING ARRANGEMENTS	
	APPROVED BY: DATE :	STANDARD NO. 6-23