SECTION 11

GROUNDING

Grounding – General Discussion

A good grounding system allows protective devices to operate during fault conditions and is also one of the ways to protect people from hazardous voltages. The aim of grounding is to keep the voltage of grounded objects as close as possible to the potential of earth so there is no potential difference between the object and a person in contact with the object.

A good ground is dependent on a pressure contact. For example, a ground rod driven into compact soil provides a good pressure contact between the soil (marl) and the ground rod; a ground coil relies on the weight of the pole to maintain a pressure contact between the soil and the ground coil.

Ground coils installed in rock normally do not provide a good ground and should not be relied on by themselves. An anchor stub with ground coil, installed in concrete, or a ground rod installed in the backfill around a pole does not provide an adequate ground.

Ground rods must be installed in undisturbed soil to provide an adequate ground.

Neutral

A multi-grounded neutral is to be used on all distribution feeders (12.5 KV).

Ground Electrodes

(a) New construction – a ground coil shall be installed on all primary poles, before they are planted (a ground coil is not required on any pole that has been identified as a service pole or a stub pole).

(b) Existing construction – a ground rod shall be installed at intervals of not more than 500ft. (generally every third pole), and connected to the neutral.

(c) In addition to ground coils, a ground rod shall be installed at all transformer locations.

Ground Connections:

(a) All electrodes (ground coil or ground rod) shall be connected to the neutral.
(b) All connections will be done using service sleeves and crimpits.

Structure Grounding & Leakage Current Control

With the severe salt contamination conditions on Grand Cayman it is inevitable that leakage will occur on our insulating devices (insulators, cutouts, disconnects, bushings etc.).

We must however ensure this leakage is minimized to provide a reasonably reliable electrical service.

We can minimize this leakage current by using insulating devices with a longer leakage distance (normally this means using the industry standard for 25kV or higher depending on the level of contamination).

Since there will also be periodic leakage with 25kV insulated devices we must provide a leakage path to prevent burn-offs (crossarms, poles etc.) This can be done quite effectively by tying all the hardware together (pins) and connecting them to the pole ground, however this interferes with hot line work as it increases the danger for the linemen. Since the problem occurs at the connections between the pin and the crossarm; the crossarm and the pole; or the cutout bracket and the pole/crossarm, it is a common practice to use double lock washers at these connections to maintain a reasonable pressure between the items and therefore a current path of low resistance. This will control or minimize the heating and arcing at these connections, which could eventually result in pole and/or crossarm fires.

Our specifications therefore include coil lock washers on:

(1) All crossarm pins and pole top pins
(2) All crossarm mounting bolts and DA bolts
(3) All cutout bracket mounting bolts and disconnect switch-mounting arrangements.

The leakage path on vertical type structures is provided by tying all the hardware together and connecting to the ground wire.

The decisions to ground the hardware on vertical type structures, whereas we use double coil lock washers on all other structures, was made because of the following:

(1) A pole burn-off on this type of structure may cause extensive damage to other structures as well as public property.
(2) These structures are expensive to replace and require extensive interruptions.
(3) The overall percentage of the vertical type structure is low and requires little maintenance.

All poles will be equipped with a ground coil and a ground wire that will extend up the pole in accordance with the structure type, and be connected to the neutral conductor.

Ground Rods-Overhead Lines

(A) Drive ground rod vertically at spacing and to full depth shown on Drawing. If refusal is encountered before full depth is reached and relocation of rod is impractical, remove rod and drill a 3 to 6 inch diameter vertical hole to full depth, place ground rod, and fill remaining space with conductive concrete.

(B) Ground rods are required at all switch, riser, and transformer locations, and at other locations as required by the assembly drawings.

(C) Install ground rods along center line of line at 2 feet from the pole.

Grounding Connection

(A) Clean electrical contact surface with solvent or abrasion, as recommended by connector manufacturer, to provide a clean contact.

(B) Apply a liberal coat of oxidation inhibiting compound to all buried and bimetallic connections. Remove excess compound after installation.

(C) Torque connection bolt as recommended by the manufacturer.

(D) Do not extend bolt more than ½ inch beyond the face of the nut.

Ground Resistance Tests

Conduct structure ground resistance tests for each grounded structure using either the fall-of-potential (three-pin) method or the direct reading ground resistance described as follows:

1. Follow guidelines in IEEE Standard 81.

2. Use test equipment designed specifically for these ground resistance measurements. Retest all anomalous test results. Avoid, to the maximum extend practical, buried metallic feature and other object that could significantly distort readings.

3. Test the equipment calibration daily; recalibrate as necessary in accordance with manufacturer recommendations.

4. Record test condition and factor that could affect readings. Note whether neutral is installed and whether ground rod is connected to structure.

5. Test and record ground resistance after each grounding system modification at a structure. Based on ground resistance measurements, the ENGINEER may specify additional grounding. The target ground resistance for distribution is 40 ohms; install additional grounding where measured resistance is greater than 45 ohms. The target ground resistance for transmission is 20 ohms; install additional grounding where measured resistance is greater than 25 ohms.

NOTES:

1. A GROUND COIL AND POLE GROUND SHALL BE INSTALLED ON EVERY POLE, BEFORE PLANTING.

2. THE GROUND COIL IS INSTALLED BY SECURING A #4 BARE COPPER GROUND WIRE AT THE BUTT OF THE POLE AS SHOWN, AND ATTACHING IT ALONG THE LENGTH OF THE POLE.

3. THE WIRE USED FOR THE GROUND COIL SHALL BE OF SUFFICIENT LENGTH TO EXTEND TO THE TOP OF THE POLE. HOWEVER IT SHOULD NOT EXTEND BEYOND THE NEUTRAL LOCATION PRIOR TO POLE PLANTING (COIL GROUND WIRE AT THIS LOCATION).

4. THE POLE GROUND SHALL BE CONNECTED TO THE NEUTRAL AT ALL STRUCTURES WITH THE EXCEPTION OF SERVICE POLES POLES.

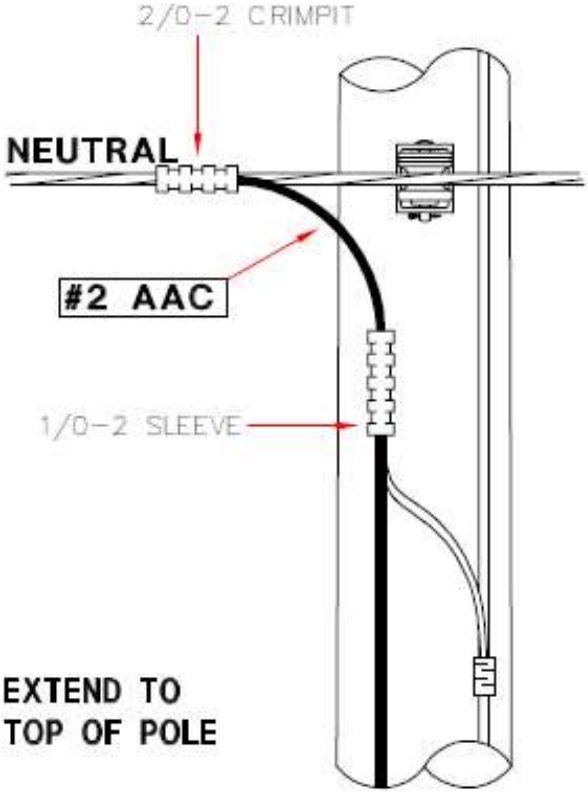

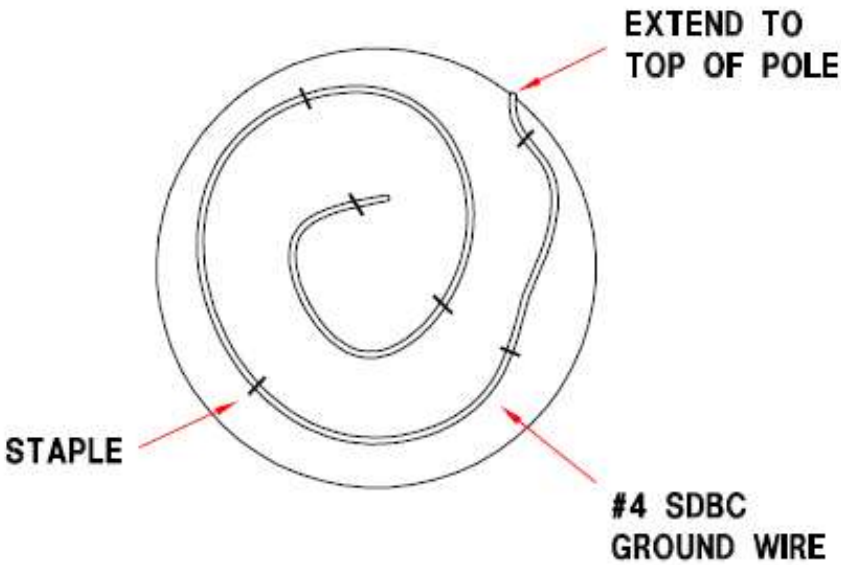

You've got the power
457 NORTH SOUND RD.
P.O. BOX 38 G.T.,GRAND CAYMAN,
CAYMAN ISLANDS, B.W.I.
TELEPHONE: (345)-945-5300/5200

DATE: April 26, 2018	**DISTRIBUTION STANDARDS**	
DRAWN: C. Rose		
REV.:	**NEUTRAL & POLE GROUNDING DETAILS**	
DATE:		
	APPROVED BY:	**STANDARD NO. 11-4**
	DATE:	

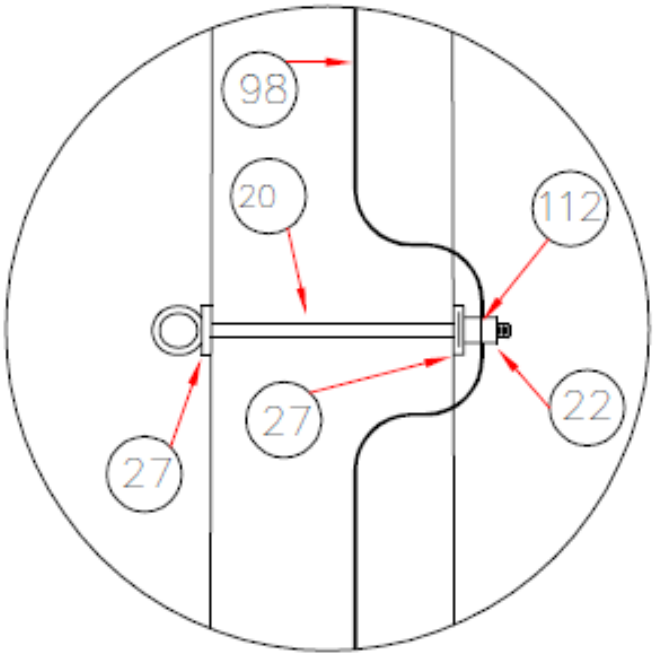

DETAIL “A”

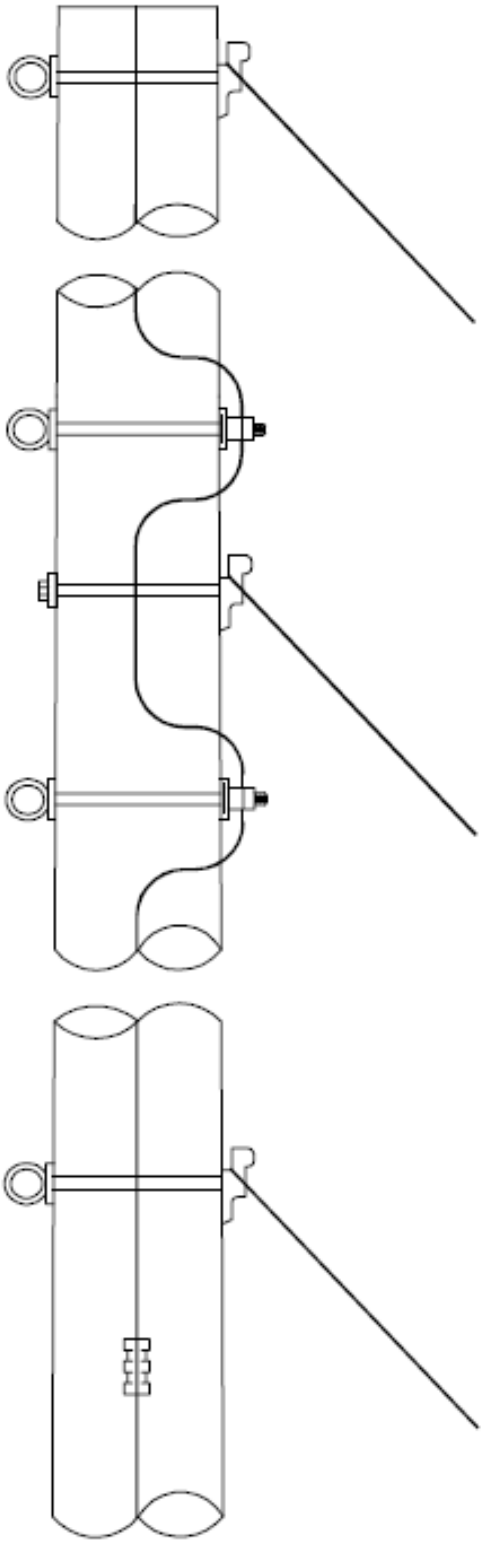

SEE DETAIL “A”

You’ve got the power
457 NORTH SOUND RD.
P.O. BOX 38 G.T.,GRAND CAYMAN,
CAYMAN ISLANDS, B.W.I.
TELEPHONE: (345)-945-5300/5200

DATE: May 1, 2018	**DISTRIBUTION STANDARDS**	
DRAWN: C. Rose		
REV.:	**GROUNDING DETAILS ‘DE’ & ‘DV’ STRUCTURES**	
DATE:		
	APPROVED BY:	**STANDARD NO. 11-5**
	DATE:	