SECTION 9

TAPS & DISCONNECTS

H.V. Taps - General

Taps (high voltage) are a frequently required part of our electrical system and encompass single phase and three phase – with and without disconnects. A single phase tap is designated by "1T", and with disconnects "1TD". Page 9-2 specifies when disconnects are required at the tap off structure.

There are occasions when the tap cannot be guyed at the tap off structure; however there is an alternative by using a SLACK SPAN as shown below. This method can accommodate one and three phase taps.

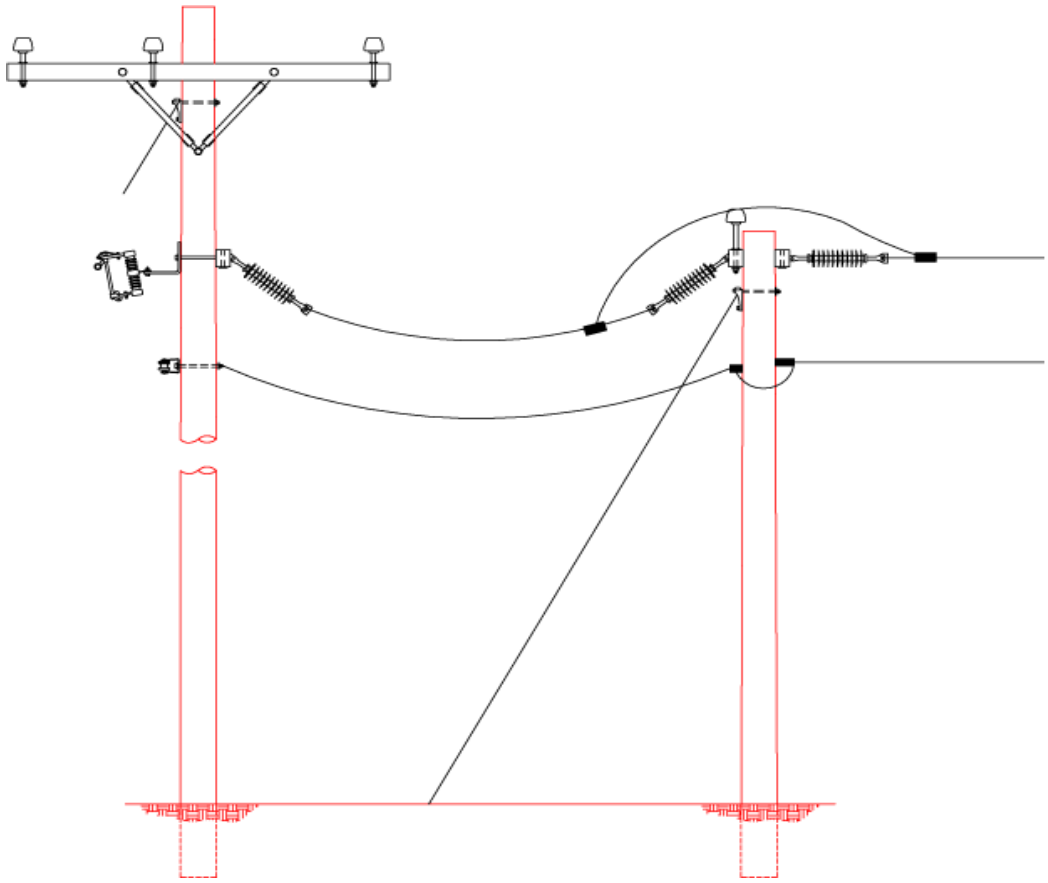

Just ensure that the slack span is indeed a slack span and therefore should have at least two feet of sag. The length of the slack span is determined by the minimum guy lead required (25' for single phase).

The first structure on the tap should be no less than a 40' pole.

We normally cannot specify where a tap will be required as it will quite often be determined by a side road or a heavy service; we do however have alternative locations for transformers. It is therefore a good idea to minimize the number of HV connections on each pole to either a transformer installation or a H.V. tap, preferably not both.

Line Switching & Protection

Fused disconnects (cutouts) shall be installed on all transformer installations and underground cable terminations.

Loadbreak fused disconnects shall be used on all three phase and single phase taps. When it is not practical or desirable to install disconnects on the tap off structure, it is quite permissible and sometimes prudent to install these disconnects on the first structure on the tap line.

Where a disconnect device is desired and a fuse is not desirable or the rating is not available, a solid blade disconnect may be used.

When disconnects are not required at the tap off it is a good idea to use a disconnectable connection; a stirrup and hot line clamp for 2/0 and 4/0 conductors and a disconnectable T-tap for 477 kcmil conductor.

When extending taps, the tap off point should be checked for disconnect requirements; if fused disconnects already exist, the fuse size should be checked.

For long three phase taps and three phase taps in excess of 100 amperes a recloser may be used (see chart below).

Basic Ratings for Reclosers

Type	Nominal Voltage (kV)	Max Continuous Current (amps)	Max Interrupting Current (symmetrical amps)			
			@ 2.4 - 4.8 kV	@ 4.8 - 8.32 kV	@ 8.32 - 14.4 kV	@ 24.9 kV
Single-Phase						
H	2.4 - 14.4	50	1250	1250	1250	-
4H	2.4 - 14.4	100	3000	2500	2000	-
V4H	2.4 - 14.4	200	3000	2500	2000	-
L	2.4 - 14.4	280	6000	5000	4000	-
V4L	2.4 - 14.4	280	6000	6000	6000	-
E	24.9	100	-	-	-	2500
4E	24.9	280	-	-	-	4000
V4E	24.9	280	-	-	-	6000
Three-Phase						
6H	2.4 - 14.4	100	3000	2500	2000	-
V6H	2.4 - 14.4	200	3000	2500	2000	-

GUIDELINES FOR FUSING PROTECTION OF SPUR LINES
Single-phase and three-phase

Fuse Size (A)	Fuse Type	CUC Stock Number	Max total tx. Capacity on spur line (1phase) (KVA) (note 1)	Largest allowable 1-phase tx. (KVA) (note 2)	Largest allowable 3-phase tx. (KVA) (note 3)
30	T	LIN 374 000 03	150	50	150
50	T	LIN 372 000 02	250	100	300
80	T	LIN 372 000 03	400	167	500
100	T	LIN 374 000 04	500	250	750

NOTES:

1. Refers to the maximum allowable total transformer kVA on one phase of a spur line protected by the specific fuse
2. Consult with T&D Engineering for spur lines where the installed transformer capacity is greater than 500 kVA (single-phase) or 1500 kVA (three phase)
3. Refers to the largest size individual transformer that can be installed on a spur line protected by the specific fuse. Consult with T&D Engineering where transformers larger than 750 kVA are installed on a spur line.

You've got the power
457 NORTH SOUND RD.
P.O. BOX 38 G.T.,GRAND CAYMAN,
CAYMAN ISLANDS, B.W.I.
TELEPHONE: (345)-945-5300/5200

DATE: Feb. 22, 2018	**DISTRIBUTION STANDARDS**	
DRAWN: C. Rose		
REV.:	**TAPS AND DISCONNECTS**	
DATE:		
	APPROVED BY:	**STANDARD NO. 9-3**
	DATE:	